Part number

CHOT 10.4

Brief description:

hoods for two levers, size "57.27", side entry, 1/2' NPT, metal version, IP66

Product description	
Version	metal version
Series	hoods for two levers
Product type	with 4 pegs
Variant	side entry
Family	CLASS enclosures
Size	size "57.27"
Technical data	
Material	metal
IP degree of protection	IP66 (and IP69K DIN 40050 - 9)
Cable entry	1/2" NPT
Further technical details	
Weight	145,00 g

Approvals / Standards	
Quality mark	cULus (type:4/4X/12), GL, EAC
Conformity	CQC, CE
General ordering information	
EAN13 code	8015747020763
Tariff number	85369095
Packaging Information	
Packaging length	255,00 mm
Packaging height	150,00 mm
Packaging width	180,00 mm
Packaging weight	2,65 kg
Packaging volume	6,89 dm^3
Packaging description	Carton box
Packaging quantity	20 Pcs
Packaging EAN code	8015747020770
Sub-packaging weight	0,66 kg
Sub-packaging description	Plastic pakaging
Sub-packaging quantity	5 Pcs
Sub-packaging EAN barcode	8015747020787

Part number

CHOT 10.4

Catalogue drawings

CHO [CAO] CHV (CAV) - MHO [MAO] MHV (MAV)

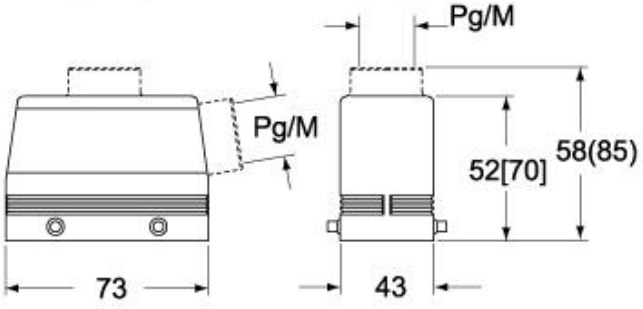

CAF - MAF/MFF

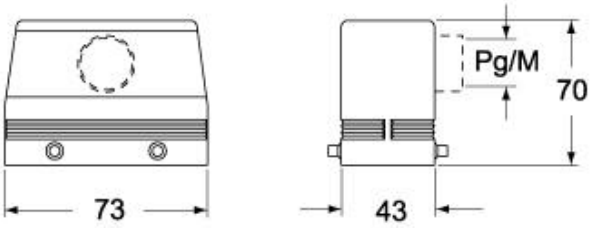
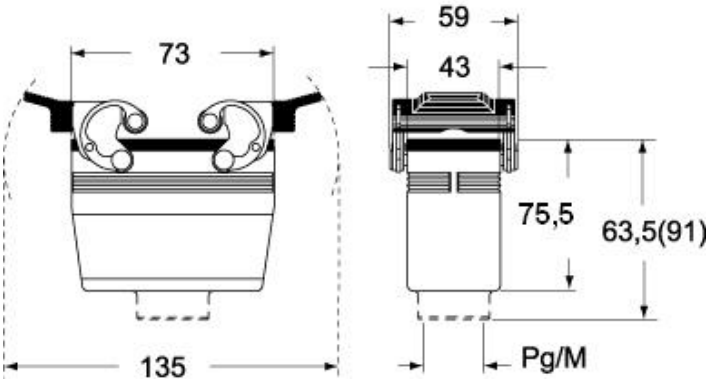
CHV G (CAV G) - MHV G (MAV G) - [MFV G]